Advanced Semiconductor Business Inc.

plerow™ APL1400-T

PLL Synthesizer Module

Features

- 4 dBm Output Level at 1400 MHz
- Channel Step Size : 100 kHz
- 2nd Harmonic : < -15 dBc
- Spurious Level : < -70 dBc
- Lock Time : < 10 ms
- 40 mA Current Consumption

Description

The plerow™ PLL synthesizer module was designed for use in wireless and wireline systems in a wide range of frequency from 50 MHz to 6 GHz. ASB's PLL provides exceptionally low spurious and phase noise performance with fast locking time and low current consumption. All products are available in a surface-mount type package.

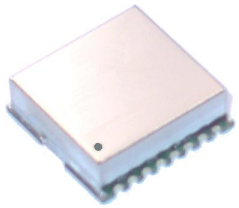

Specifications

Parameter	Unit	Min.	Typical	Max.
Frequency Range	MHz	1350		1450
Output Power	dBm	2	4	6
Supply Voltage	V	4.75	5	5.25
Current Consumption	mA		20	35
Channel Step Size	kHz		100	
2nd Harmonics	dBc		-22	-15
Spurious Level	dBc		-65	-70
Lock Time	ms		5	10
Reference Frequency	MHz		13	
Reference Input Level	dBm		-	
Phase Noise (C / N)				
@ 1 kHz	dBc/Hz		-68	-63
@ 10 kHz			-98	-93
@ 100 kHz			-118	-115
Output Impedance	Ω		50	
Operating Temp. Range	°C	-40	25	80
Package Type & Size	mm	SMT, 19.0W×19.0L×5.8H		

1) Measurement conditions are as follows: T = 25°C, V_{CC} = 5 V, Freq. = 1400 MHz, 50 ohm system.
2) Frequency stability of internal ref. TCXO is +/- 2.5 ppm (max.) over the operating temperature range.

More Information

Website: www.asb.co.kr
E-mail: sales@asb.co.kr

Tel: (82) 42-528-7223
Fax: (82) 42-528-7222

ASB Inc., 4th Fl. Venture Town Bldg., 367-17 Goijeong-Dong, Seo-Gu, Daejon 302-716, Korea

Outline Drawing

APL0000-T Type

Type	Dimension
PLL IC + VCO + TCXO	19 x 19 x 5.8

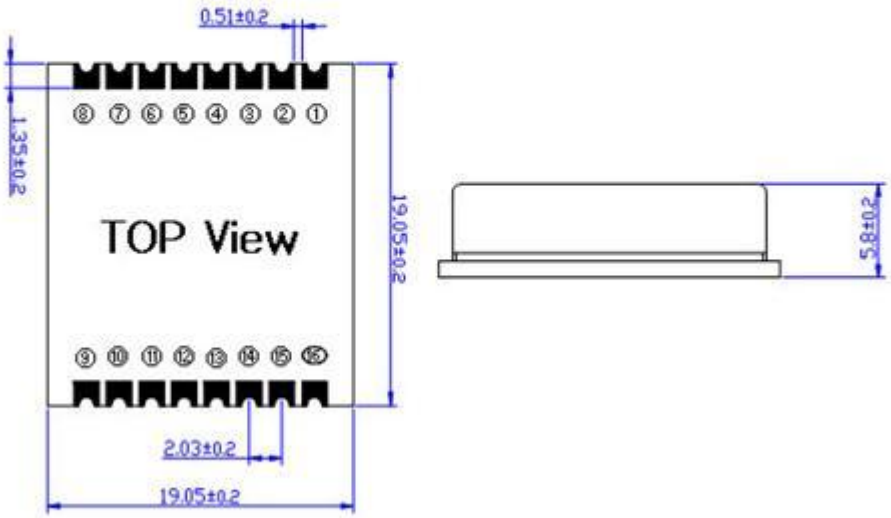
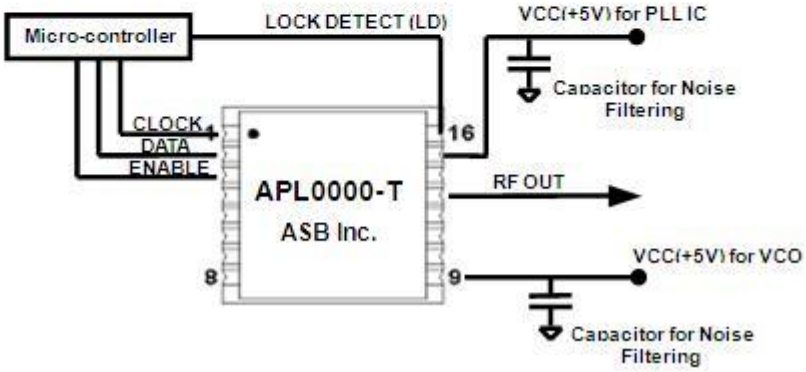
Pin Out for PLL			
Pin No.	Application	Pin No.	Application
1	CLOCK	9	VCC (VCO)
2	DATA	13	RF OUT
3	ENABLE	15	VCC (PLL)
4	GROUND	16	LOCK DETECT
All other Pins are Grounded / Internal TCXO