ASL22N

High Gain, Low Noise Amplifier

Features

- 29.5 dB Gain at 1575 MHz
- GPS, GLONASS, Galileo and Compass
- 1.0 dB NF at 1575 MHz
- Power ON/OFF Function
- **I_{DD}= 9.0 mA @ V_{CTL}= 3.0 V**

Description

ASL22N a LNA for GPS, GLONASS, Galileo and Compass in mobile equipment which requires lower current and component count for small PCB area. Power saving function is built in. Low noise performance is kept over the wide range of power enable voltage and DC power supply voltage. It has also a low noise and high linearity over a wide range of frequency up to 6 GHz.

RoHS-compliant GREEN Package

Package Style: UQFN6

Typical Performance

(Supply Voltage = +3 V, T_A = +25 °C, Z_0 = 50 Ω)

Parameters	Units	Typical
Testing Frequency	MHz	1575
Gain	dB	29.5
S11	dB	-16
S22	dB	-15
Output IP3[1)]	dBm	19
Noise Figure	dB	1.0
Output P1dB	dBm	9.5
Supply Current	mA	9
Supply Voltage	V	+3
Control Current	μA	400
Control Voltage V_{CTL}	V	+3

1) OIP3 is measured with two tones at an output power of -10 dBm/tone separated by 1 MHz.

Product Specifications

Parameters	Units	Min	Typ	Max
Frequency	MHz		1575	
Gain	dB		29.5	
S11	dB		-16	
S22	dB		-15	
Output IP3	dBm		19	
Noise Figure	dB		1.0	
Output P1dB	dBm		9.5	
Supply Current	mA		9	
Supply Voltage	V		3	
Control Current	μA		400	
Control Voltage V_{CTL} [1)]	V		+3	

[1)] 7dB gain variation @ 1.0 < V_{CTL} < 3.0

Absolute Maximum Ratings, T_A = +25 °C

Parameters	Rating
Operating Case Temperature	-40 to +85 °C
Storage Temperature	-40 to +150 °C
Supply Voltage	+5 V
Operating Junction Temperature	+150 °C
Input RF Power (CW, 50 Ω matched @1575MHz)*	+15 dBm

The operation of this device in excess of any of these limits may cause permanent damage.

* Refer to the max. input power data at http://www.asb.co.kr/pdf/Maximum_Input_Power_Analysis.pdf. The max. input power, in principle, depends upon the application frequency, the matching circuit, and device voltage.

Applications

- GPS, GLONASS, Galileo, Compass
- 1559 MHz ~ 1610 MHz (3 V)
- 1164 MHz ~ 1300 MHz (3 V)

Pin Configuration

Pin No.	Function
1	OUT
2	VDD
3	GND
4	IN
5	GND
6	VCTL

Outline Drawing

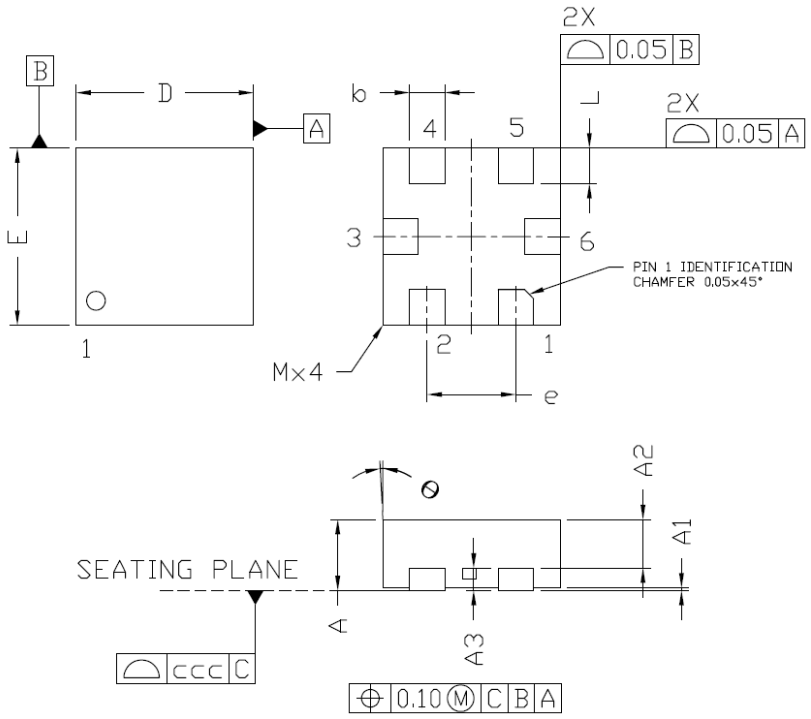

Symbol	Dimensions in Millimeters		
	MIN	NOM	MAX
A	0.35	---	0.40
A1	0.00	---	0.05
A2	0.223	---	0.273
A3	---	0.127REF	---
b	0.15	0.20	0.25
D	0.95	1.00	1.03
E	0.95	1.00	1.03
e	---	0.50BSC	---
L	0.15	0.20	0.25
θ	-12	---	0
ccc	---	0.05	---
M	---	---	0.05
Burr	0.00	0.03	0.06

Pin NO.	Function	Pin NO.	Function.
1	OUT	4	IN
2	VDD	5	GND
3	GND	6	VCTL

ESD Classification & Moisture Sensitivity Level

ESD Classification

HBM	Class 0
	Voltage Level: 200 V
MM	Class A
	Voltage Level: 40 V

CAUTION: Gallium Arsenide Integrated Circuits are sensitive to electrostatic discharge (ESD) and can be damaged by static electricity. Proper ESD control techniques should be used when handling these devices

Moisture Sensitivity Level (MSL)

Level 3 at 260 °C reflow

APPLICATION CIRCUIT

GPS,GLONASS,Galileo&Compass

1559 MHz ~ 1610 MHz

+3 V

Frequency (MHz)	1575
Magnitude S21 (dB)	29.5
Magnitude S11 (dB)	-16
Magnitude S22 (dB)	-15
Output P1dB (dBm)	9.5
Output IP3[1)] (dBm)	19
Noise Figure (dB)	1.0
Supply Current (mA)	9
Supply Voltage (V)	+3
Control Current (μA)	400
Control Voltage V_{CTL} (V)	+3

1) OIP3 is measured with two tones at an output power of -10 dBm/tone separated by 1MHz.

Schematic

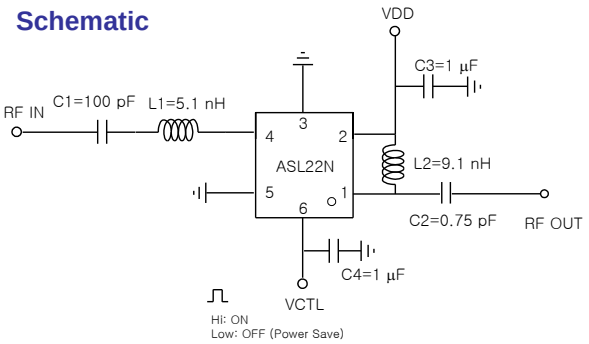

* On this evaluation circuit, C4 does not make any difference, so may not be used. But, using C4 or not shall be decided upon the GPS system board.

Board Layout (FR4, 14x11.3 mm², 0.8T)

Top

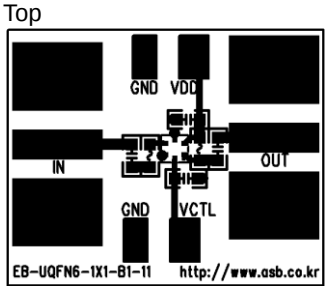

Bottom

S-parameters

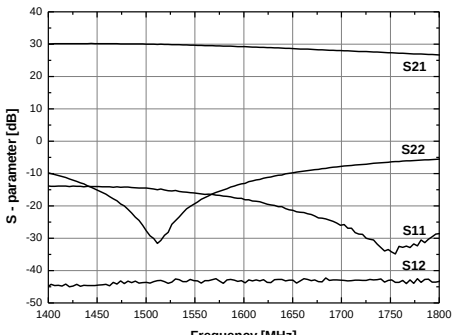

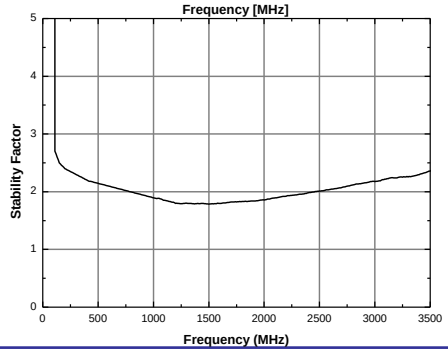

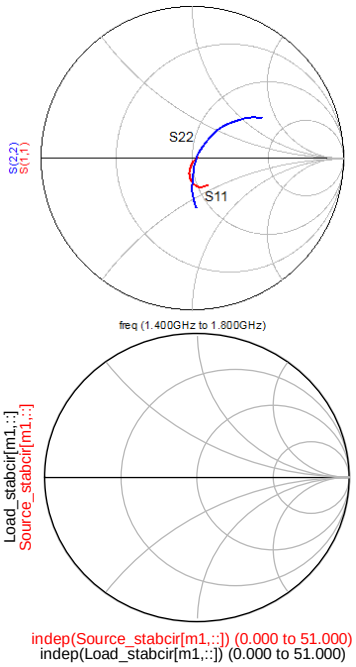

APPLICATION CIRCUIT

GPS,GLONASS,Galileo,Compass

1164 MHz ~ 1300 MHz

+3 V

Frequency (MHz)	1227
Magnitude S21 (dB)	30
Magnitude S11 (dB)	-16
Magnitude S22 (dB)	-11
Output P1dB (dBm)	10
Output IP3[1)] (dBm)	18
Noise Figure (dB)	1.05
Supply Current (mA)	9
Supply Voltage (V)	+3
Control Current (μA)	400
Control Voltage V_{CTL} (V)	+3

1) OIP3 is measured with two tones at an output power of -10 dBm/tone separated by 1MHz.

Schematic

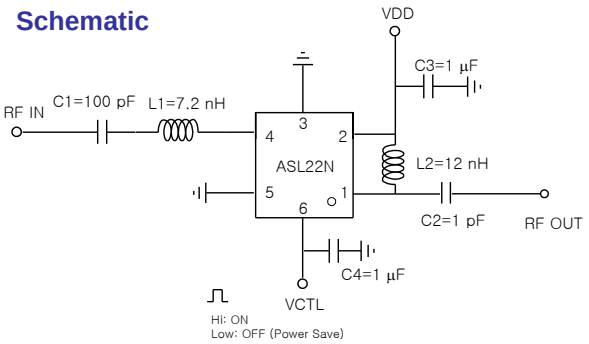

* On this evaluation circuit, C4 does not make any difference, so may not be used. But, using C4 or not shall be decided upon the GPS system board.

Board Layout (FR4, 14x11.3 mm², 0.8T)

Top

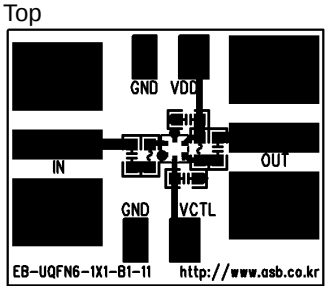

Bottom

S-parameters

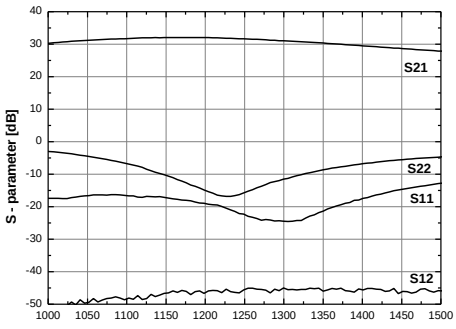

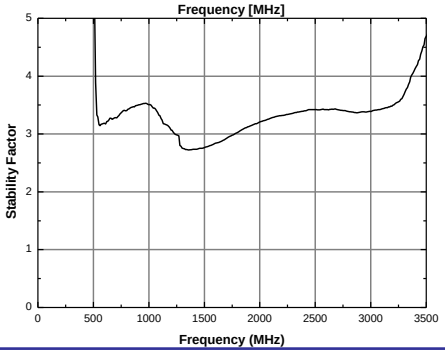

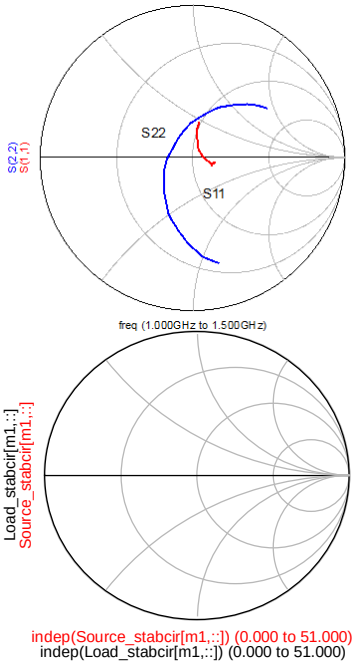

Recommended Soldering Reflow Profile

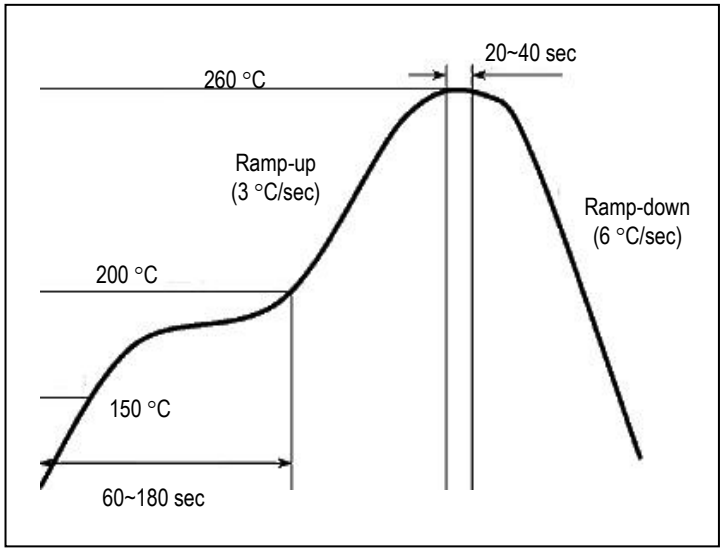

Copyright ©2013-2017 ASB Inc. All rights reserved. Datasheet subject to change without notice. ASB assumes no responsibility for any errors which may appear in this datasheet. No part of the datasheet may be copied or reproduced in any form or by any means without the prior written consent of ASB.