ASW205

5 ~ 6000 MHz MMIC Amplifier

Features

- 20.7 dB Gain at 2 GHz
- 19.5 dBm P1dB at 2 GHz
- 32.5 dBm Output IP3 at 2 GHz
- MTTF > 100 Years
- Single Supply

Description

The ASW205, a power amplifier MMIC, has a high linearity, high gain, and high efficiency over a wide range of frequency, being suitable for use in both receiver and transmitter of telecommunication systems 5 MHz to 6 GHz. The amplifier is available in a SOT89 package and passes through the stringent DC, RF, and reliability tests.

RoHS-compliant GREEN Package

Package Style: SOT89

Typical Performance

(Supply Voltage = Device Voltage, T_A = +25 °C, Zo = 50 Ω)

Parameters	Units	Typical				
Frequency	MHz	150	900	2000	2700	3000
Gain	dB	25.7	24.2	20.7	18.3	18.7
S11	dB	-17	-15	-17	-11	-18
S22	dB	-10	-10	-9	-10	-14
Output IP3	dBm	33.5[1)]	33.5[1)]	32.5[1)]	31.0[1)]	27.5[2)]
Noise Figure	dB	3.3	3.5	3.6	3.9	3.5
Output P1dB	dBm	18.5	19.0	19.5	18.0	17.0
Current	mA	70	70	70	70	70
Device Voltage	V	+5	+5	+5	+5	+5

1) OIP3 is measured with two tones at an output power of +0 dBm/tone separated by 1 MHz.
2) OIP3 is measured with two tones at an output power of +5 dBm/tone separated by 1 MHz.

Application Circuit

- 500 ~ 2700 MHz
- 5 ~ 4000 MHz
- IF
- 3000 ~ 4500 MHz
- 50 ~ 1000 MHz (75 Ω)
- 5 ~ 200 MHz (75 Ω)
- 500 ~ 2700 MHz (3.3 V/ 35 mA)
- 70 ~ 3240 MHz

Product Specifications

Parameters	Units	Min	Typ	Max
Testing Frequency	MHz		2000	
Gain	dB		20.7	
S11	dB		-17	
S22	dB		-9	
Output IP3	dBm		32.5	
Noise Figure	dB		3.6	
Output P1dB	dBm		19.5	
Current	mA		70	
Device Voltage	V		+5	

Pin Configuration

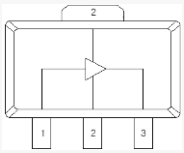

Pin No.	Function
1	RF IN
2	GND
3	RF OUT & Bias

Absolute Maximum Ratings

Parameters	Rating
Operating Case Temperature	-40 to +85 °C
Storage Temperature	-40 to +150 °C
Device Voltage	+5.5 V
Operating Junction Temperature	+150 °C
Input RF Power (Continuous)*	+22 dBm
Thermal Resistance	145 °C/W

The operation of this device in excess of any of these limits may cause permanent damage.

* Refer to the max. input RF power data at http://www.asb.co.kr/pdf/Maximum_Input_Power_Analysis.pdf. The max. input RF power, in principle, depends upon application frequency, matching circuit, and device voltage.

Outline Drawing

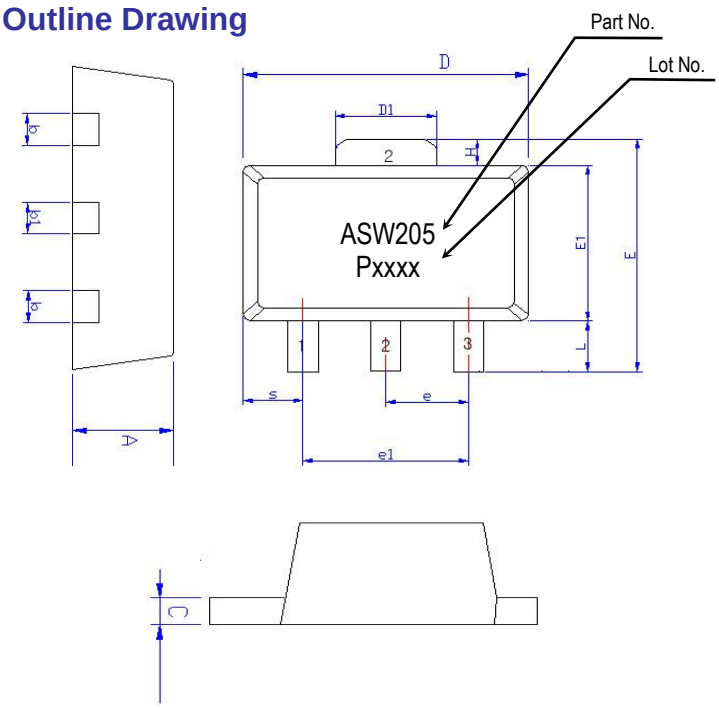

Symbols	Dimensions (In mm)		
	MIN	NOM	MAX
A	1.40	1.50	1.60
L	0.89	1.04	1.20
b	0.36	0.42	0.48
b1	0.41	0.47	0.53
C	0.38	0.40	0.43
D	4.40	4.50	4.60
D1	1.40	1.60	1.75
E	3.64	---	4.25
E1	2.40	2.50	2.60
e1	2.90	3.00	3.10
H	0.35	0.40	0.45
S	0.65	0.75	0.85
e	1.40	1.50	1.60

Pin No.	Function
1	RF IN
2	GND
3	RF OUT & Bias

Mounting Recommendation (In mm)

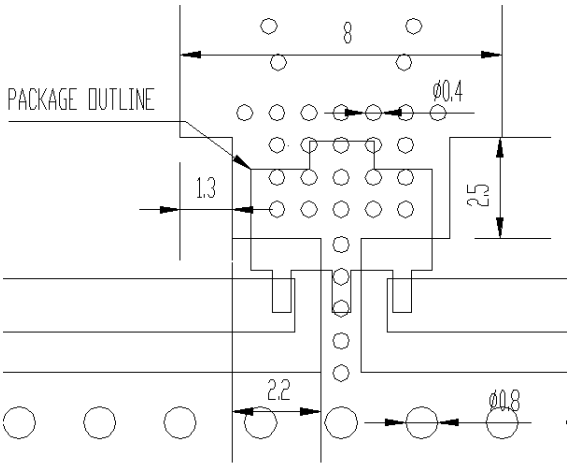

Note: 1. The number and size of ground via holes in a circuit board is critical for thermal and RF grounding considerations.
2. We recommend that the ground via holes be placed on the bottom of the lead pin 2 and exposed pad of the device for better RF and thermal performance, as shown in the drawing at the left side.

ESD Classification & Moisture Sensitivity Level

ESD Classification

HBM	Class 1B
	Voltage Level: 500 V~1000 V
MM	Class A
	Voltage Level: <200 V

CAUTION: Gallium Arsenide Integrated Circuits are sensitive to electrostatic discharge (ESD) and can be damaged by static electricity. Proper ESD control techniques should be used when handling these devices

Moisture Sensitivity Level (MSL)

Level 3 at 260 °C reflow

APPLICATION CIRCUIT

Wide Band

500 ~ 2700 MHz

+5 V

Frequency (MHz)	900	2000	2700
Magnitude S21 (dB)	24.2	20.7	18.3
Magnitude S11 (dB)	-15	-17	-11
Magnitude S22 (dB)	-10	-9	-10
Output P1dB (dBm)	19.0	19.5	18.0
Output IP3[1)] (dBm)	33.5	32.5	31.0
Noise Figure (dB)	3.5	3.6	3.9
Device Voltage (V)	+5	+5	+5
Current (mA)	70	70	70

1) OIP3 is measured with two tones at an output power of +0 dBm/tone separated by 1MHz.

Schematic

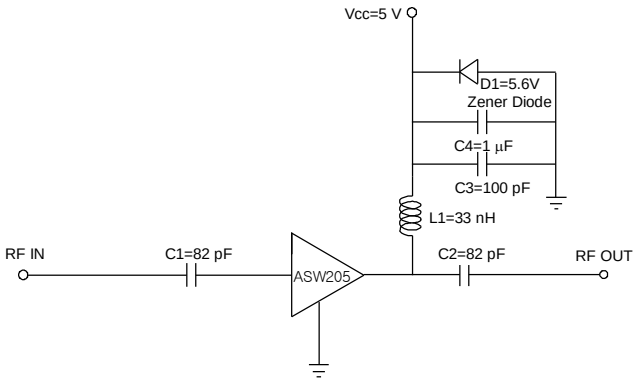

Board Layout (FR4, 40x40 mm², 0.8T)

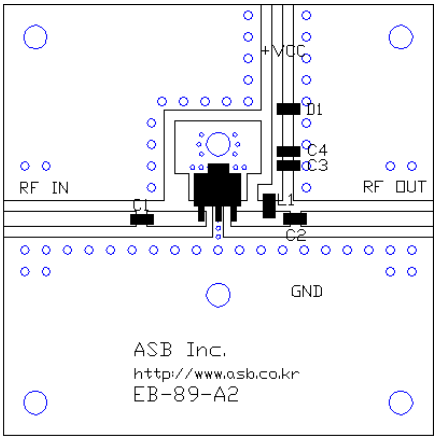

S-parameters & K-factor

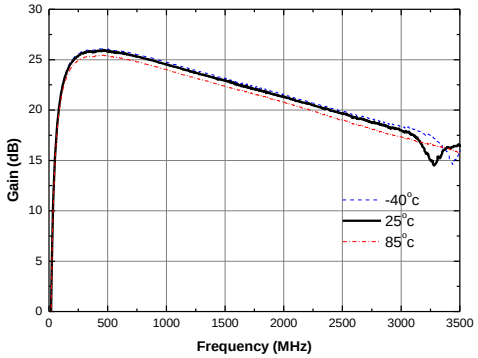

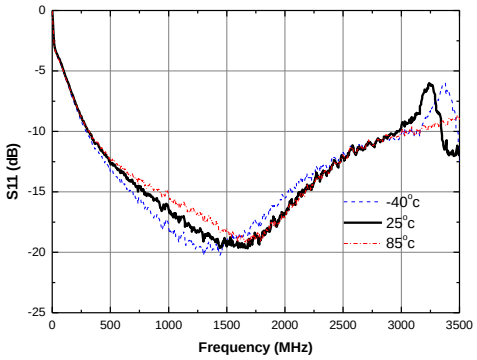

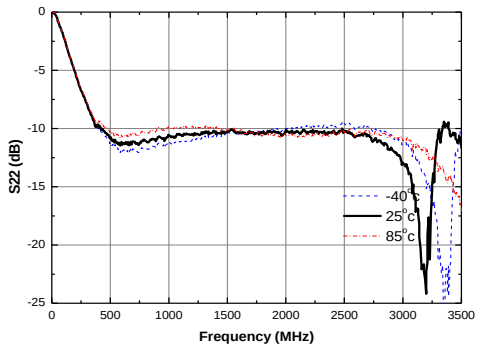

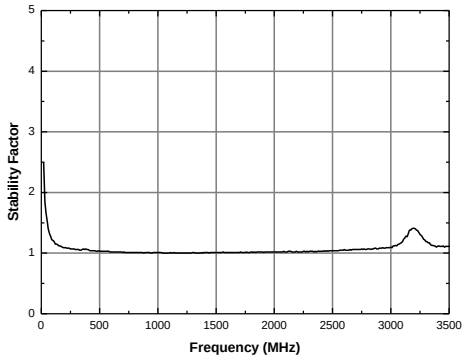

Current vs. Temperature

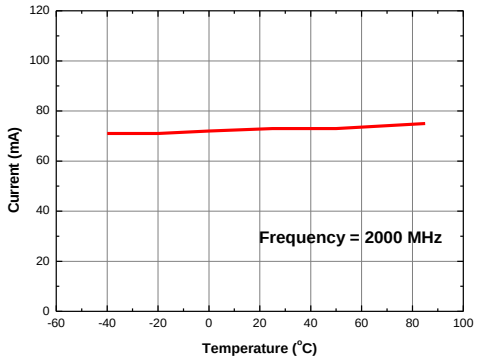

Gain vs. Temperature

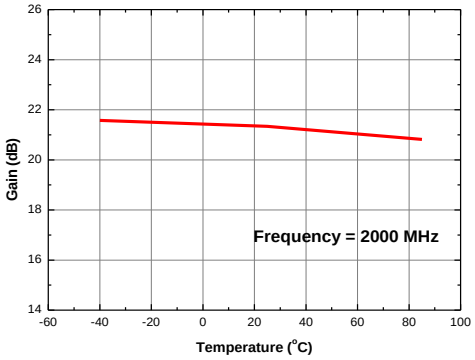

P1dB vs. Temperature

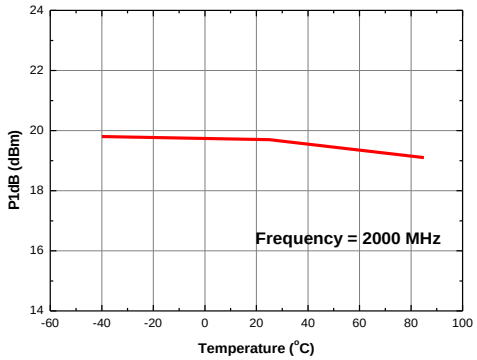

Output IP3 vs. Tone Power (Frequency=2000 MHz)

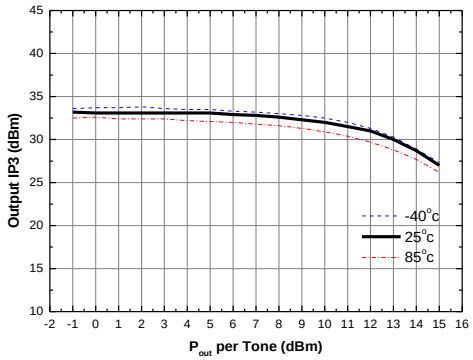

LTE ACLR – 10 MHz & 20 MHz

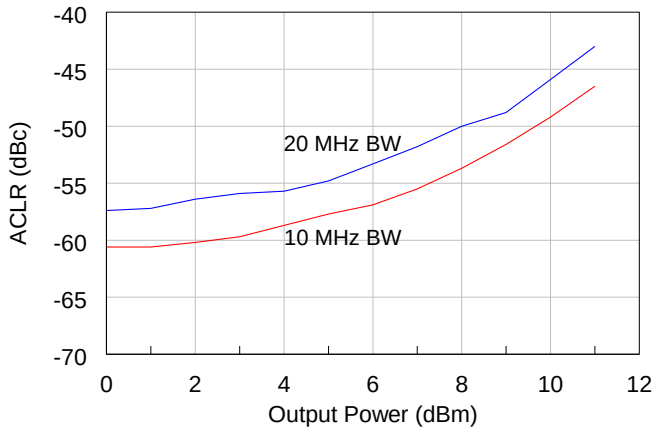

1) Test Source : LTE_FDD_test model 3.1, BW: 10 MHz & 20 MHz, Test Frequency: 2.6 GHz

LTE ACLR – 20 MHz

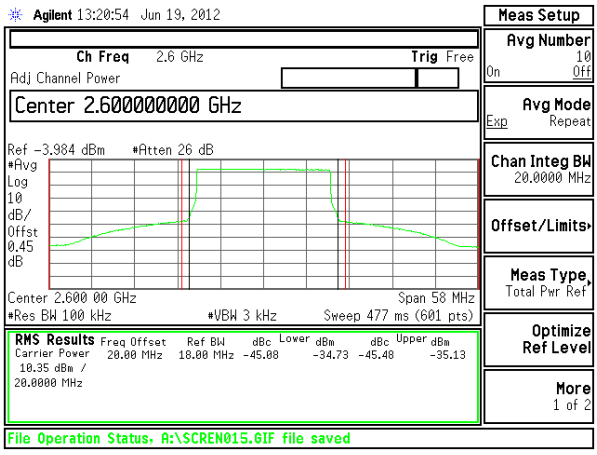

2) Test Source : LTE_FDD_test model 3.1, BW: 20 MHz, Test Frequency: 2.6 GHz

APPLICATION CIRCUIT

Wide Band

5 ~ 4000 MHz

+5 V

Frequency (MHz)	5	2000	4000
Magnitude S21 (dB)	19.0	18.7	18.3
Magnitude S11 (dB)	-7	-9	-10
Magnitude S22 (dB)	-8	-13	-20
Output P1dB (dBm)	17.0	18.0	14.5
Output IP3[1)] (dBm)	32.0	31.5	26.5
Noise Figure (dB)	4.1	4.0	4.1
Device Voltage (V)	+5	+5	+5
Current (mA)	70	70	70

1) OIP3 is measured with two tones at an output power of +0 dBm/tone separated by 1MHz.

Schematic

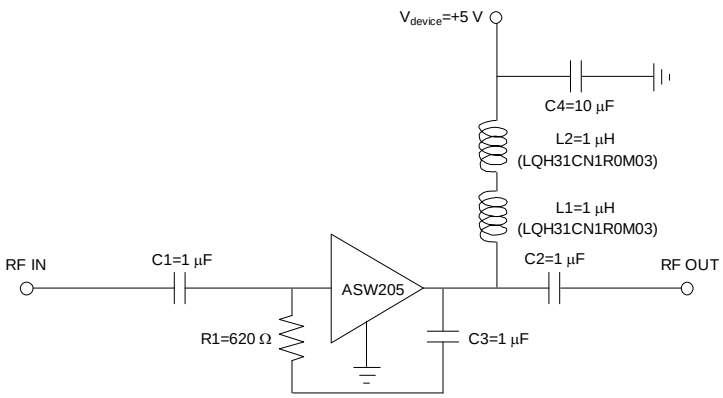

Board Layout (FR4, 40x40 mm², 0.8T)

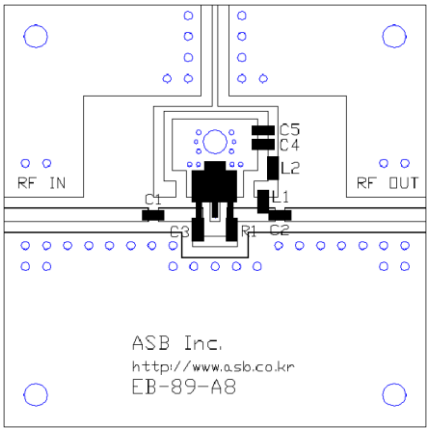

S-parameters & K-factor

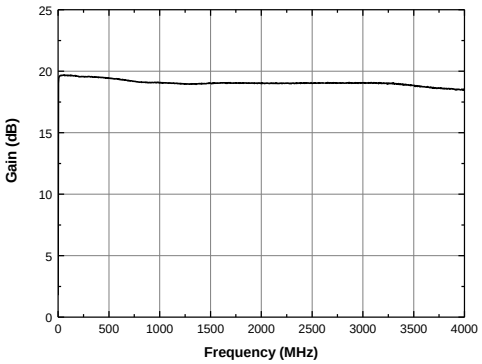

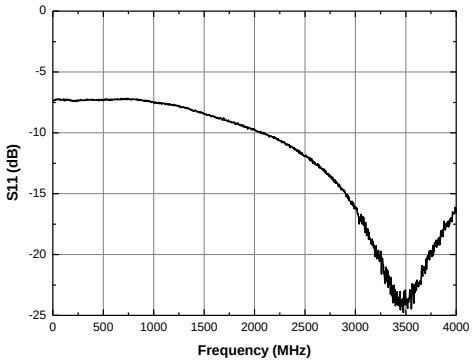

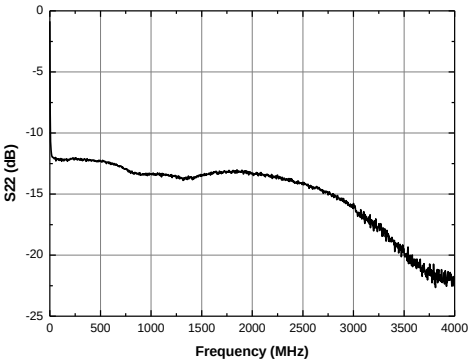

APPLICATION CIRCUIT

IF
50 ~ 450 MHz
+5 V

Frequency (MHz)	70	150	300
Magnitude S21 (dB)	25.8	25.7	25.4
Magnitude S11 (dB)	-17	-17	-17
Magnitude S22 (dB)	-10	-10	-10
Output P1dB (dBm)	18.5	18.5	19.0
Output IP3[1)] (dBm)	32.0	33.5	34.5
Noise Figure (dB)	3.3	3.3	3.4
Device Voltage (V)	+5	+5	+5
Current (mA)	70	70	70

1) OIP3 is measured with two tones at an output power of +0 dBm/tone separated by 1MHz.

Schematic

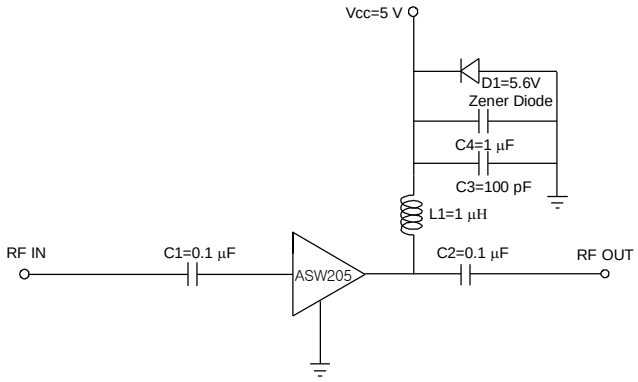

Board Layout (FR4, 40x40 mm², 0.8T)

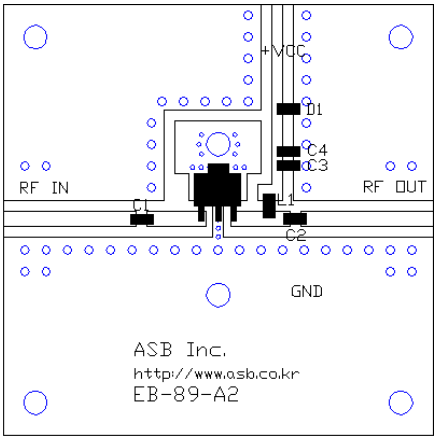

S-parameters & K-factor

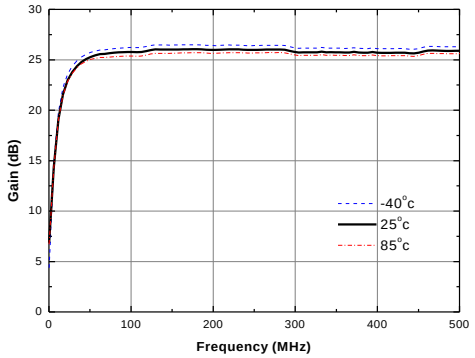

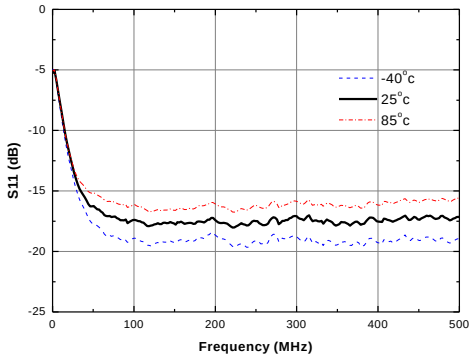

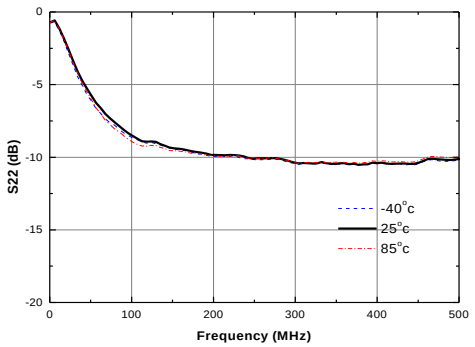

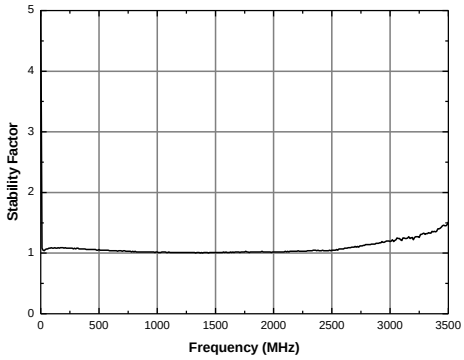

Current vs. Temperature

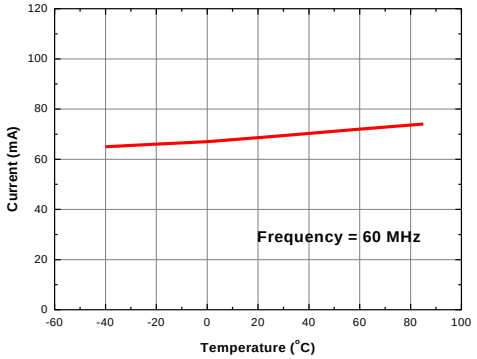

Gain vs. Temperature

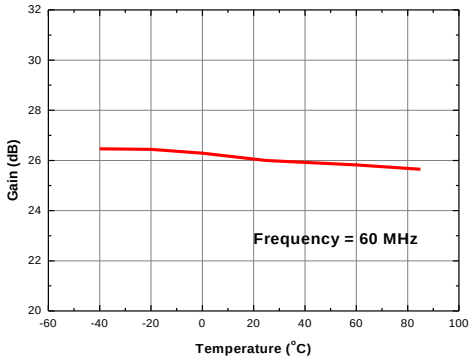

NF vs. Temperature (Frequency = 60 MHz)

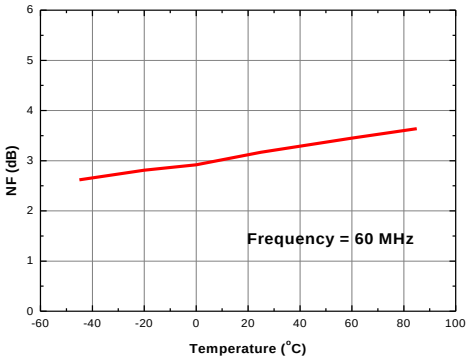

APPLICATION CIRCUIT

Wide Band

3000 ~ 4500 MHz

+5 V

Frequency (MHz)	3000	4500
Magnitude S21 (dB)	18.7	18.0
Magnitude S11 (dB)	-18	-12
Magnitude S22 (dB)	-14	-14
Output P1dB (dBm)	17.0	14.5
Output IP3[1)] (dBm)	27.5	26.0
Noise Figure (dB)	3.5	4.1
Device Voltage (V)	+5	+5
Current (mA)	70	70

1) OIP3 is measured with two tones at an output power of +5 dBm/tone separated by 1MHz.

Schematic

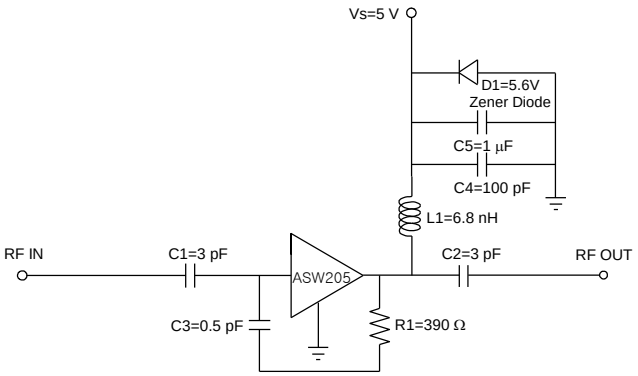

Board Layout (FR4, 40x40 mm^2, 0.8T)

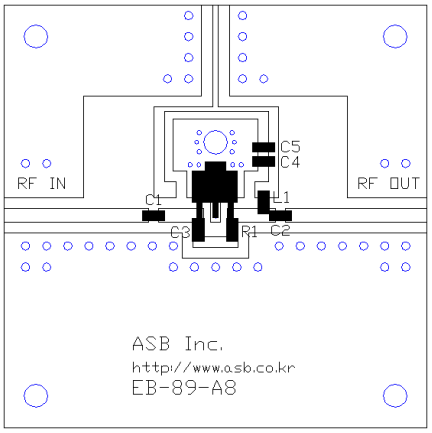

S-parameters & K-factor

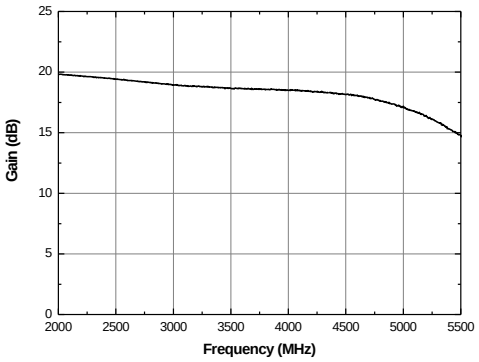

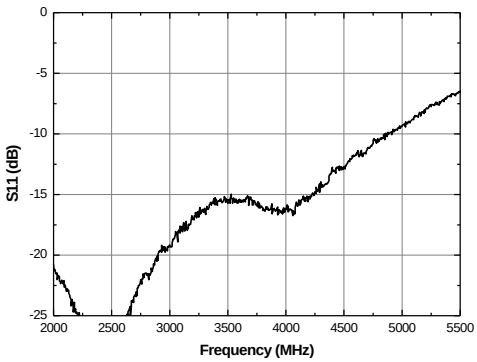

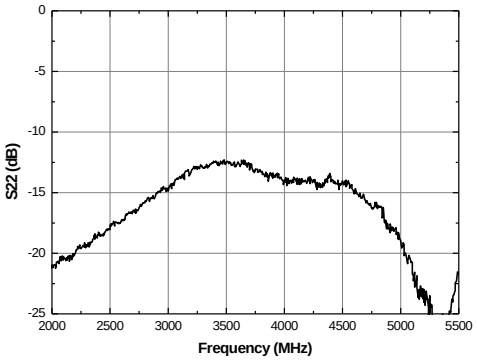

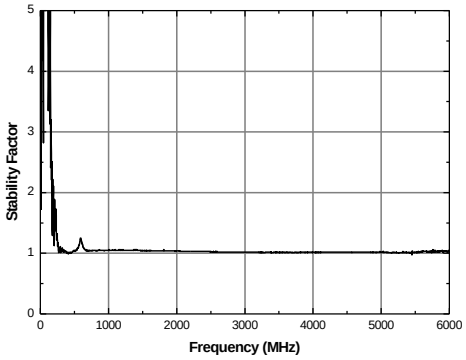

APPLICATION CIRCUIT

CATV (75 Ω)

50 ~ 1000 MHz

+5 V

Frequency (MHz)	50	500	860
Magnitude S21 (dB)	23.8	24.3	23.8
Magnitude S11 (dB)	-14	-10	-11
Magnitude S22 (dB)	-10	-13	-10
Output P1dB (dBm)	15.0	17.5	17.0
Output IP3[1)] (dBm)	28.0	32.5	31.5
Output IP2[1),2)] (dBm)	33.0	42.5	48.0
Noise Figure (dB)	3.3	3.7	3.8
Device Voltage (V)	+5	+5	+5
Current (mA)	70	70	70

1) OIP3 and OIP2 are measured with two tones at an output power of +3 dBm/tone separated by 6 MHz.
2) OIP2 is measured at F1+F2 Frequency.

Schematic

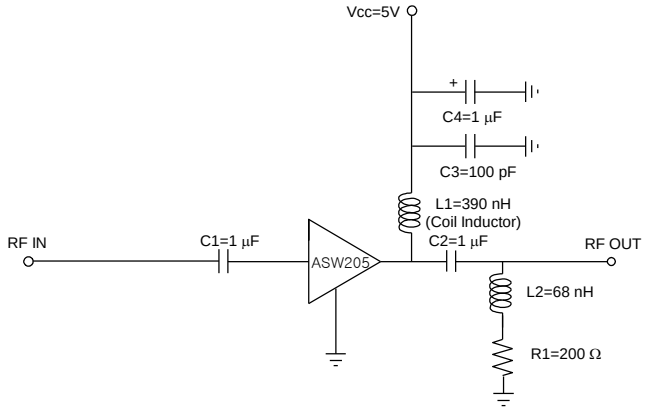

Board Layout (FR4, 40x40 mm², 0.8T)

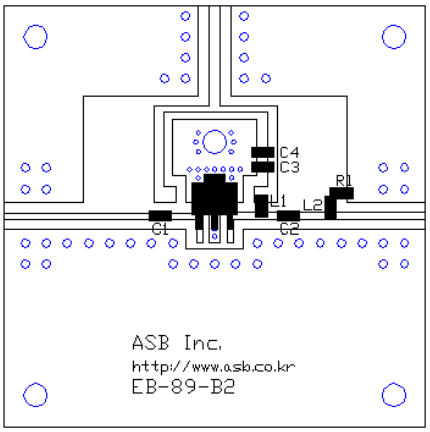

S-parameters

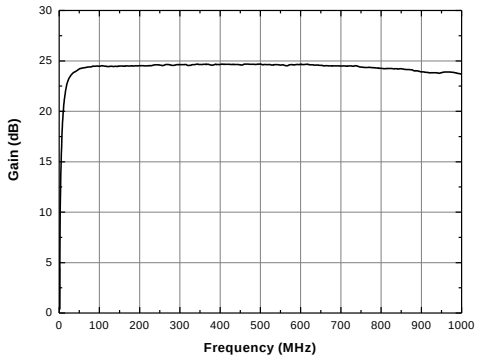

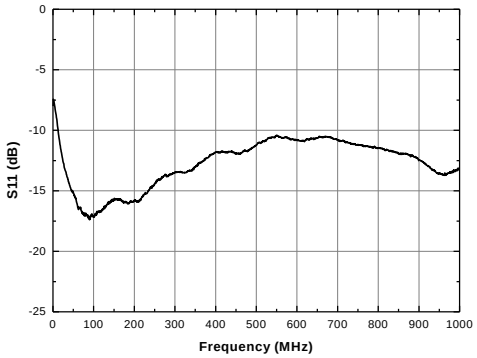

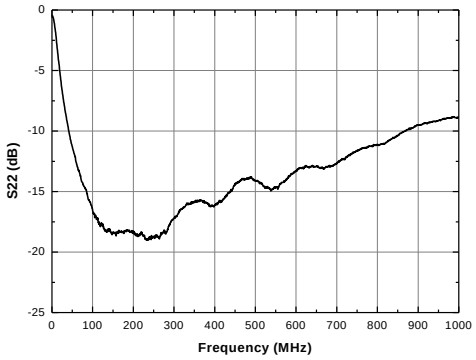

APPLICATION CIRCUIT

CATV (75 Ω)

50 ~ 1000 MHz

+5 V

Gain = 21 dB

Frequency (MHz)	50	500	1000
Magnitude S21 (dB)	21.5	21.3	20.5
Magnitude S11 (dB)	-6.5	-8.0	-9.5
Magnitude S22 (dB)	-11	-12	-13
Output P1dB (dBm)	15.0	17.5	17.0
Output IP3[1)] (dBm)	28.0	32.5	31.5
Output IP2[1),2)] (dBm)	33.0	42.5	48.0
Noise Figure (dB)	3.8	4.0	4.3
Device Voltage (V)	+5	+5	+5
Current (mA)	70	70	70

1) OIP3 and OIP2 are measured with two tones at an output power of +3 dBm/tone separated by 6 MHz.

2) OIP2 is measured at F1+F2 Frequency.

Schematic

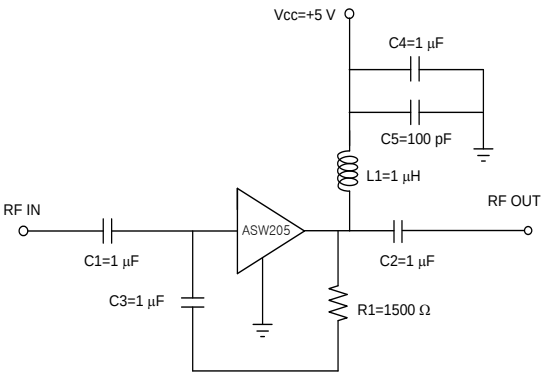

Board Layout (FR4, 40x40 mm², 0.8T)

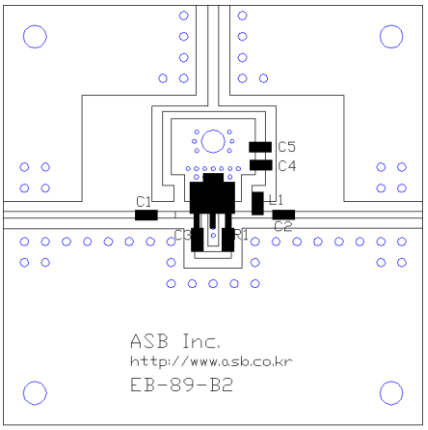

S-parameters

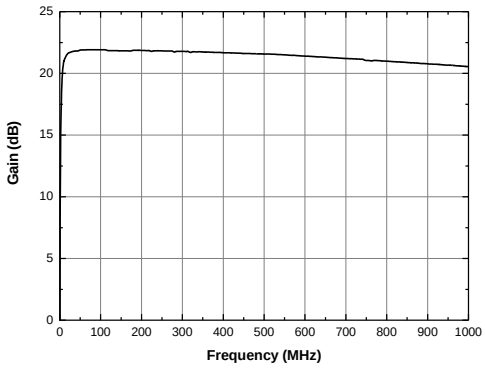

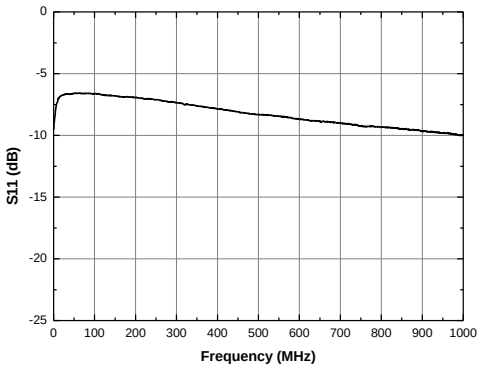

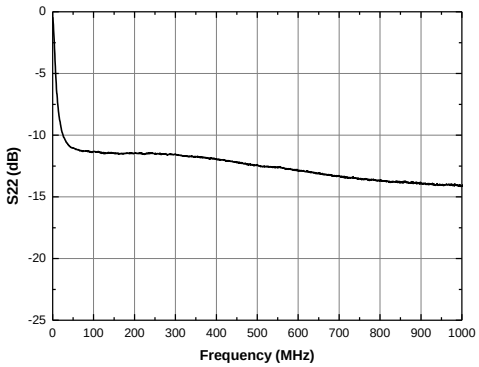

APPLICATION CIRCUIT

CATV (75 Ω)

5 ~ 200 MHz

+5 V

Frequency (MHz)	5	50	200
Noise Figure (dB)	3.5	3.5	3.5
Magnitude S21 (dB)	25.5	25.8	25.5
Magnitude S11 (dB)	-12	-12	-12
Magnitude S22 (dB)	-12	-20	-15
Output P1dB (dBm)	18	18	18
Output IP3[1)] (dBm)	31	32	33
Output IP2[1),2)] (dBm)	36	40	42
Device Voltage (V)	+5		
Current (mA)	70		

1) OIP3 and OIP2 are measured with two tones at an output power of +5 dBm/tone separated by 1 MHz.
2) OIP2 is measured at F1+F2 Frequency.

Schematic

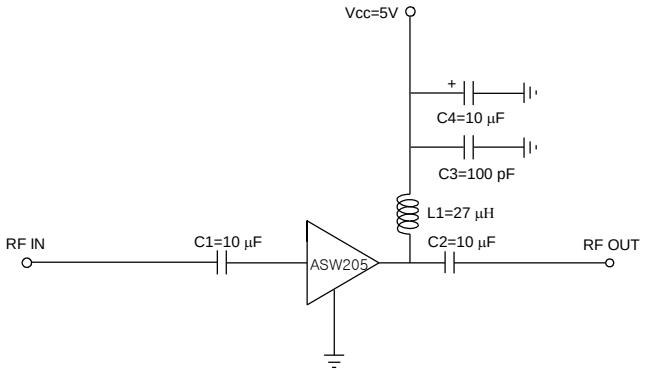

Board Layout (FR4, 40x40 mm², 0.8T)

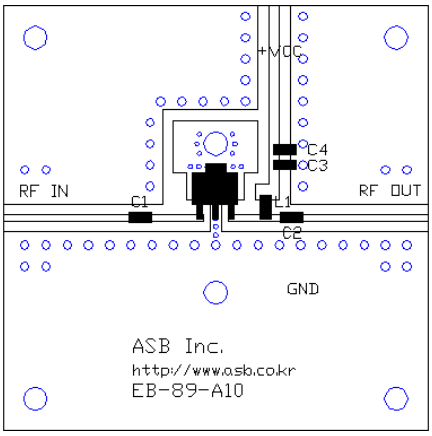

S-parameters

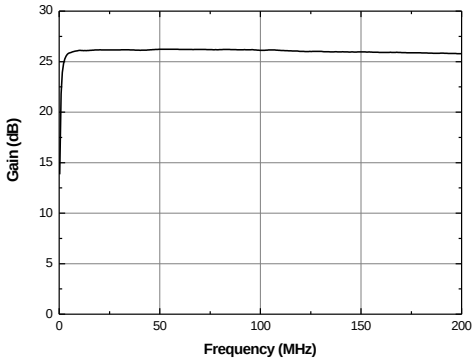

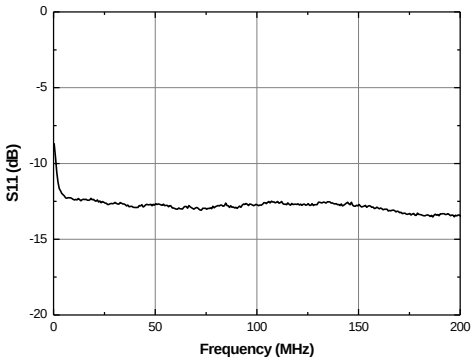

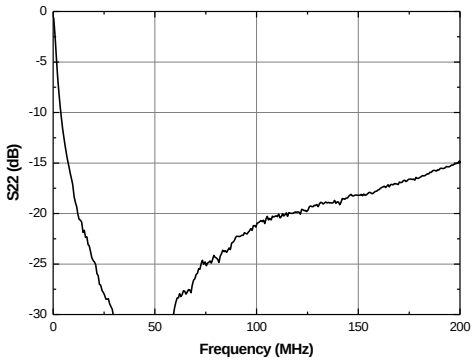

APPLICATION CIRCUIT

CATV (75 Ω)

5 ~ 105 MHz

+5 V

Frequency (MHz)	5	50	105
Noise Figure (dB)	-	4.0	4.1
Magnitude S21 (dB)	25.1	25.2	25.1
Magnitude S11 (dB)	-16.0	-16.0	-16.0
Magnitude S22 (dB)	-21.0	-24.0	-20.0
Output P1dB (dBm)	17.5	17.5	17.5
Output IP3[1)] (dBm)	30.0	30.0	30.0
Output IP2[1),2)] (dBm)	36.0	37.0	39.0
Device Voltage (V)	+4.8		
Current (mA)	58		

1) OIP3 and OIP2 are measured with two tones at an output power of +3 dBm/tone separated by 1 MHz.
2) OIP2 is measured at F1+F2 Frequency.

Schematic

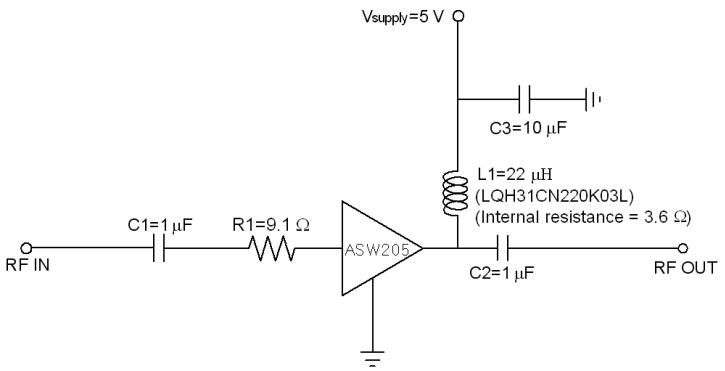

Board Layout (FR4, 40x40 mm², 0.8T)

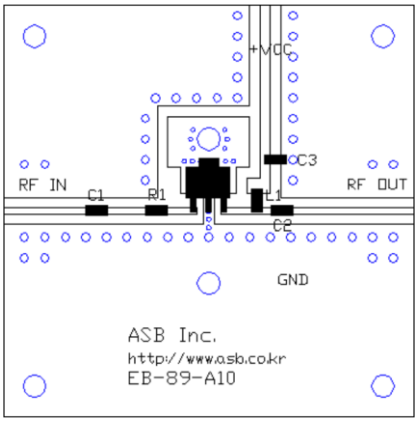

S-parameters

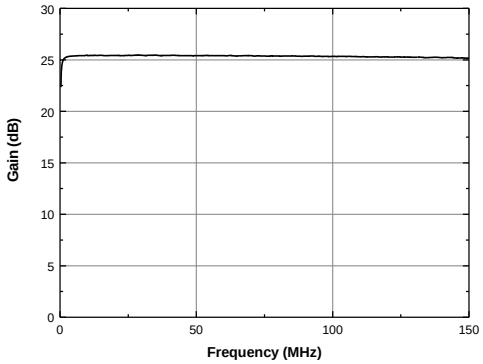

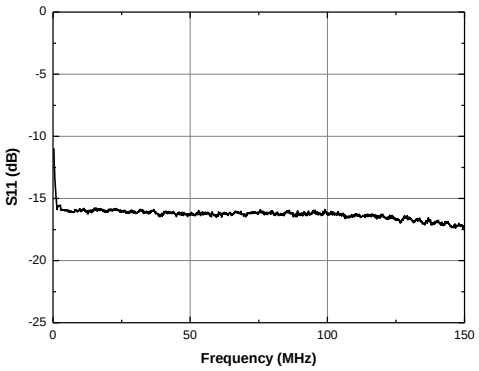

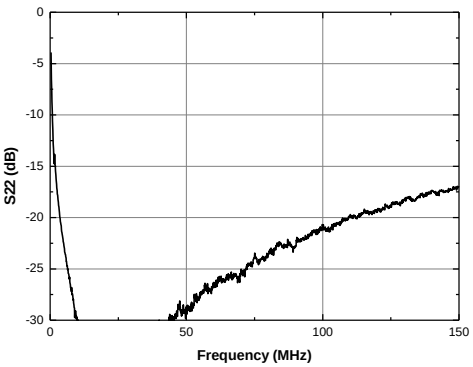

APPLICATION CIRCUIT

SMATV (75 Ω)

200 ~ 2600 MHz

+5 V

Frequency (MHz)	200	950	2150	2600
Noise Figure (dB)	3.5	3.7	3.4	3.7
Magnitude S21 (dB)	24.5	24.0	19.5	18.5
Magnitude S11 (dB)	-12.0	-12.0	-11.0	-10.0
Magnitude S22 (dB)	-15.0	-8.0	-11.0	-13.0
Output P1dB (dBm)	17.0	18.0	19.0	18.0
Output IP3[1)] (dBm)	32.0	32.0	32.0	30.0
Output IP2[1),2)] (dBm)	39.0	48.0	42.0	42.0
Device Voltage (V)	+5.0			
Current (mA)	70			

1) OIP3 and OIP2 are measured with two tones at an output power of +3 dBm/tone separated by 1 MHz.
2) OIP2 is measured at F1+F2 Frequency.

Schematic

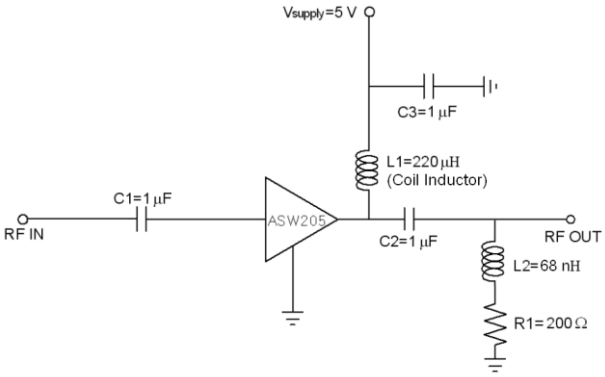

Board Layout (FR4, 40x40 mm², 0.8T)

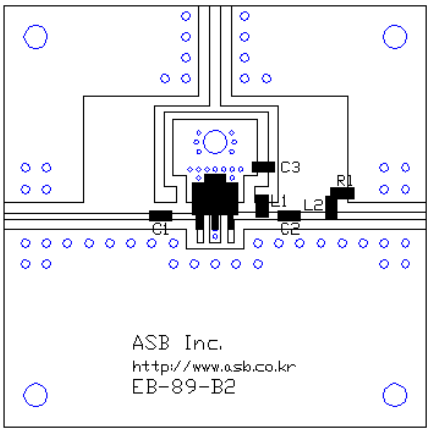

S-parameters

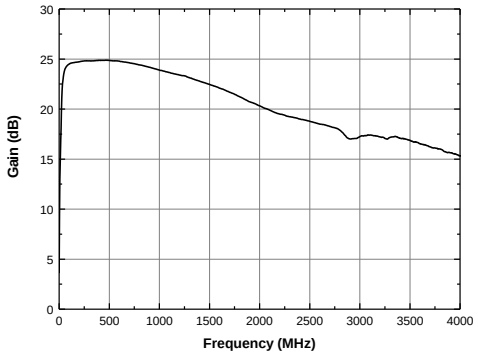

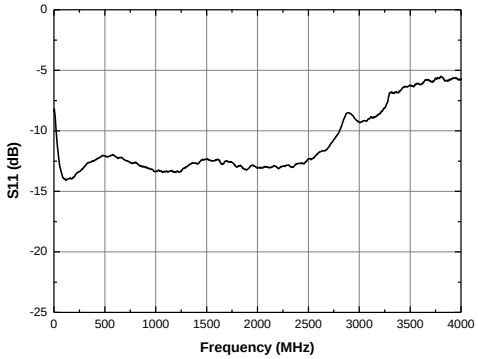

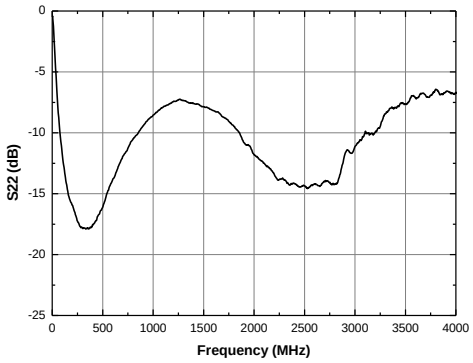

APPLICATION CIRCUIT

Wide Band

500 ~ 2700 MHz

+3.3 V/ 35 mA

Frequency (MHz)	900	2000
Magnitude S21 (dB)	22.7	19.3
Magnitude S11 (dB)	-12.0	-11.5
Magnitude S22 (dB)	-9	-8
Output P1dB (dBm)	12.5	13.5
Output IP3[1)] (dBm)	23.5	24.5
Noise Figure (dB)	3.4	3.5
Device Voltage (V)	+3.3	+3.3
Current (mA)	35	35

1) OIP3 is measured with two tones at an output power of -3 dBm/tone separated by 1MHz.

Schematic

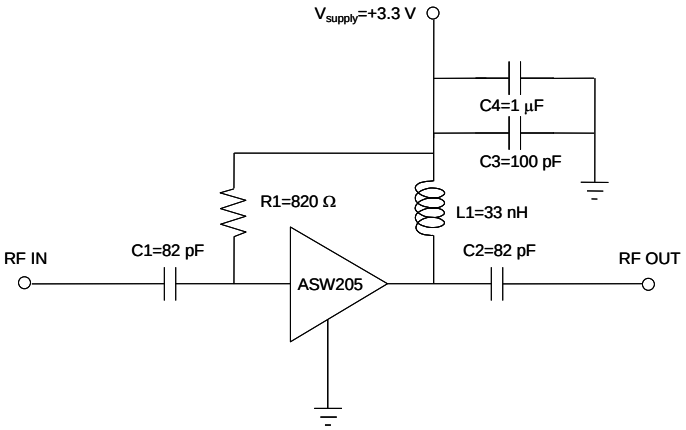

Board Layout (FR4, 40x40 mm^2, 0.8T)

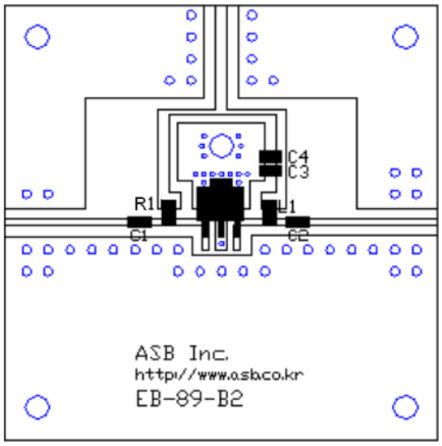

S-parameters & K-factor

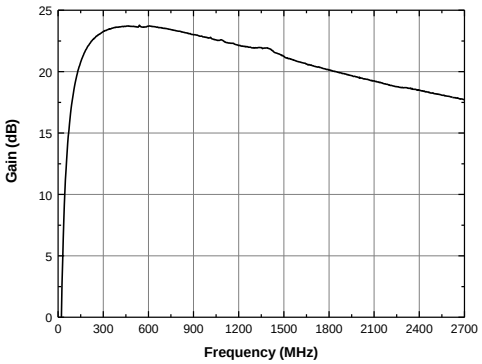

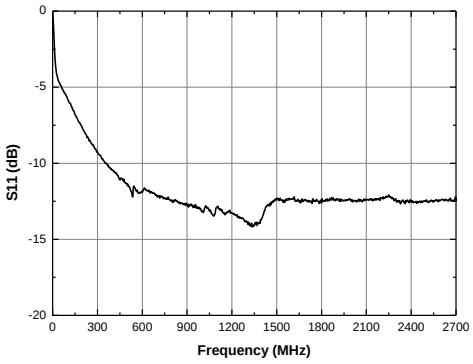

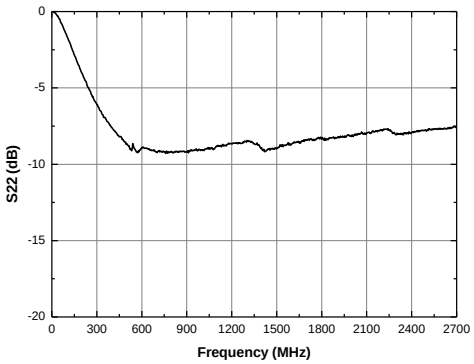

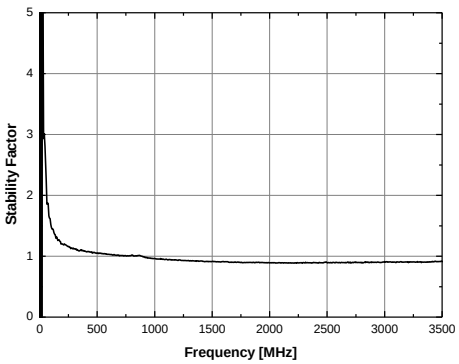

APPLICATION CIRCUIT

Wide Band

70 ~ 3240 MHz

+5 V

Frequency (MHz)	70	1200	2681	3240	70	1200	2681	3240
Magnitude S21 (dB)	20.0	19.1	18.0	18.1	19.4	18.4	17.4	17.5
Magnitude S11 (dB)	-9.0	-9.0	-12.0	-14.0	-10.0	-11.0	-13.0	-17.0
Magnitude S22 (dB)	-12.0	-10.0	-10.0	-14.0	-14.0	-11.0	-11.0	-13.0
Output P1dB (dBm)	17.0	15.0	14.0	11.0	13.0	11.0	10.0	8.0
Output IP3[1)] (dBm)	30.0	28.0	27.0	23.0	25.0	23.0	22.0	17.0
Noise Figure (dB)	3.4	3.5	3.7	3.9	3.3	3.4	3.7	3.9
Device Voltage (V)	4.7				4.5			
Current (mA)	50				35			

1) OIP3 is measured with two tones at an output power of +0 dBm/tone separated by 1MHz.

Schematic

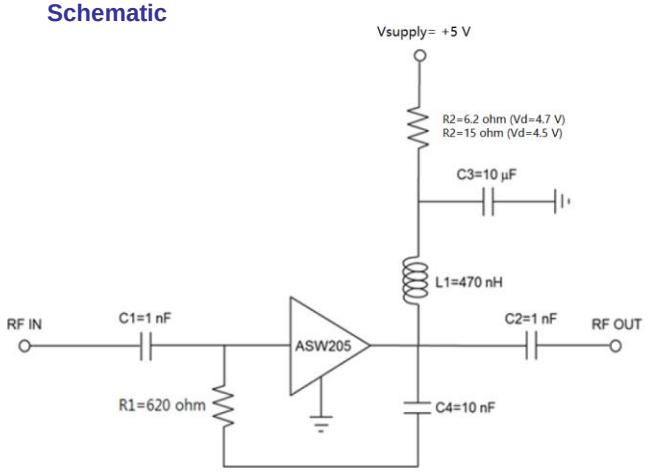

Board Layout (FR4, 40x40 mm², 0.8T)

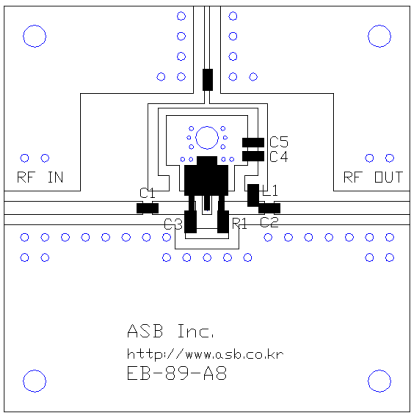

S-parameters & K-factor

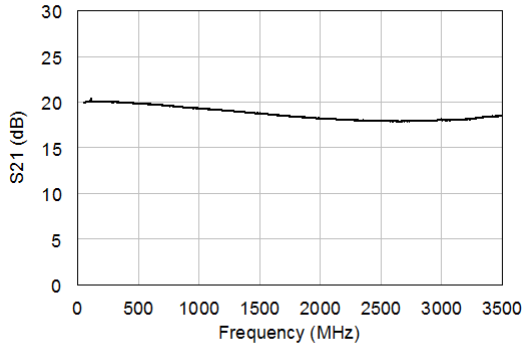

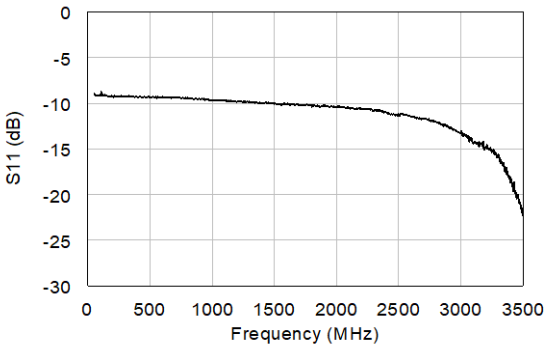

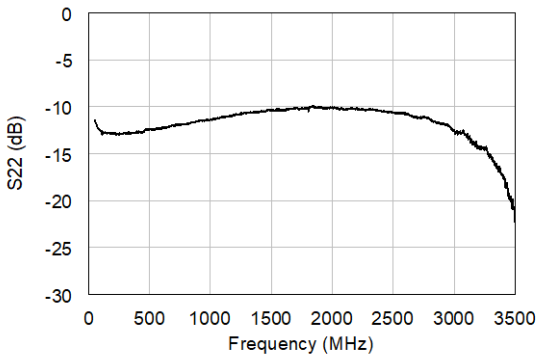

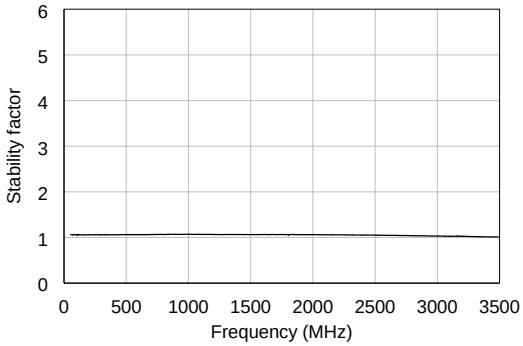

Performance with varying V_{DEVICE}

V_{DEVICE} (V)	Current (mA)	Freq. (MHz)	Gain (dB)	S11 (dB)	S22 (dB)	OIP3 (dBm)	P1dB (dBm)	NF (dB)
+5	72	900	24.4	-16.4	-11.0	33.9	19.2	3.26
		2000	20.8	-19.1	-10.7	33.3	19.8	3.38
+4.9	63	900	24.3	-15.9	-10.7	32.4	18.4	3.22
		2000	20.7	-19.0	-10.5	32.6	19.4	3.34
+4.75	52	900	24.0	-15.1	-10.0	29.8	17.0	3.10
		2000	20.6	-18.7	-10.1	30.8	18.6	3.24
+4.6	42	900	23.6	-14.0	-9.2	26.8	15.3	3.02
		2000	20.4	-18.1	-9.5	28.4	17.6	3.19
+4.45	35	900	23.3	-12.9	-8.6	23.7	13.6	3.00
		2000	20.3	-13.8	-9.2	25.1	16.4	3.30

Recommended Soldering Reflow Profile

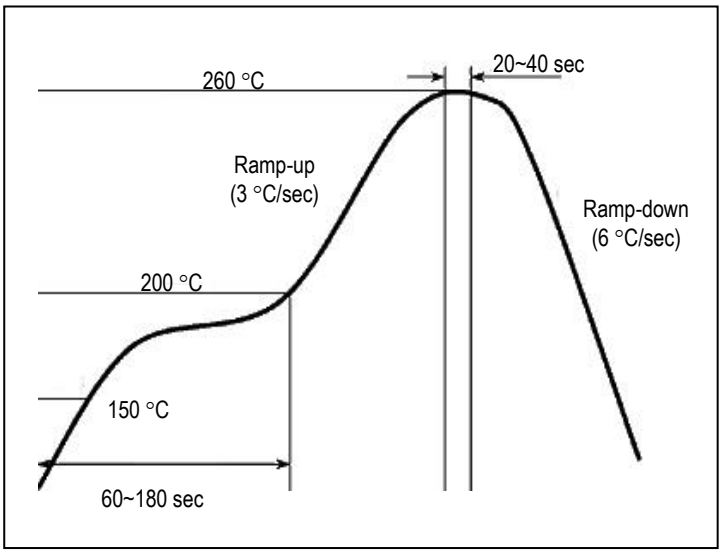

Copyright ©2009-2020 ASB Inc. All rights reserved. Datasheet subject to change without notice. ASB assumes no responsibility for any errors which may appear in this datasheet. No part of the datasheet may be copied or reproduced in any form or by any means without the prior written consent of ASB.